SynQor®

UPS

UPS-3000-S-2U

Military Grade Uninterruptible Power Supply

3000 VA/ 2500 W Output Power	80-265 Vrms 47-65 Hz or 47-800 Hz AC Input Voltage Options	115 Vrms or 230 Vrms 50 Hz, 60 Hz or 400 Hz AC Output Voltage Options	28 Vnom DC Input Voltage Option	Dual 500 W/ Single 2500 W DC Output Voltage Option	>10 Min. - 2U Battery Run Time

Sealed Construction, Ultra low Weight, Compact Size



Designed & Manufactured in USA

SynQor's Military-Grade Uninterruptible Power Supply units are designed for the extreme environmental and demanding electrical conditions of Military/Aerospace applications. SynQor's UPS incorporates field proven high efficiency designs and rugged packaging technologies. This UPS will accept a wide range of input voltage and frequency values while delivering a well-conditioned AC output to the load. Up to three units can be combined to provide higher power, higher voltage and/or multiple output phases. The use of lithium polymer batteries permits the lowest profile and lowest weight solution in its power class. It is designed and manufactured in SynQor's USA facilities to comply with a wide range of military standards. Options include a dual 500 W or single 2500 W DC output and the ability to also draw power from a military standard 28 VDC input.

Combine Up to 3 units for Higher Power, Voltage and/or 3-Phase AC output

Features

- Sealed, weather-proof, shock-proof construction
- Hot swappable internal battery pack (lithium polymer)
- >10 minute run-time at full power
- 2500 W (3000 VA) output power
- Full power operation: -20°C to +55°C
- Universal AC input: 80-265 VAC; 47-65 Hz
- Power factor correction at AC input
- Dual input (AC and optional DC)
- True on-line double conversion
- Cold start with no AC or DC input connections
- Pure sinusoidal AC output voltage (115 VAC, 60 Hz)
- Handles 0.0—1.0 power factor loads and non-linear loads
- Up to 3 units can be combined for higher power, voltage or a 3-Phase AC output
- User I/O and Configuration signal ports
- 2U high rack mount unit 17.00"W x 22.22"D x 3.40"H
- Low weight: 65 lbs. (including battery)

In-Line Manufacturing Process

- AS9100 and ISO 9001 certified facility
- Full component traceability

Options

- DC input (28Vnom) for dual source
- Wide-range AC input frequency: 47 Hz to 800 Hz
- 115 Vrms or 230 Vrms AC output
- 50 Hz, 60 Hz, or 400 Hz output
- DC1: Two auxiliary isolated DC outputs (up to 500 W each)
- DC2: Single auxiliary isolated DC output (up to 2500 W)
- Shipboard version with floating neutral wire

Specification Compliance

- MIL-STD-1399-300B - Interface Std for Shipboard Systems
- MIL-STD-810G - Environmental Engineering Considerations
- MIL-STD-461F - Electromagnetic Interference
- MIL-STD-704F - Aircraft Electrical Power Characteristics
- MIL-STD-1275D - Vehicle Electrical Power Characteristics

Contents

Technical Specification. 2
Technical Specification. 3
Mechanical Diagrams. 6
Accessory Options. 7
Ordering Information 8



Technical Specification

INPUT CHARACTERISTICS	
Operating AC Input	
Voltage	80-265 Vrms*
Frequency	47-65 Hz
(Extended Option)	(47-800 Hz Optional)
Input Power Factor	>0.98 at 47-65 Hz
	>0.97 at 400 Hz
	>0.93 at 800 Hz
Maximum Input Current Continuous	40 A (full load, 85 Vrms)
AC Input Circuit Breaker Rating	50 A
(* Power Derating to 80% below 90 Vrms)	
Operating DC Input (Optional)	
Voltage	22-33 V
Continuous Maximum Input Current	124 A (full load, 22 V)
Transient Maximum Input Current	150 A
OUTPUT CHARACTERISTICS	
Total Output Power Continuous	2500 W (3000 VA)
Maximum DC1 Output Power	1000 W
Maximum DC2 Output Power	2500 W
(Note: Available AC power is reduced by power delivered to the DC output)	
AC Output	
AC Output Waveform	Pure Sinusoidal
Voltage	115 Vrms ± 3%
	230 Vrms ± 3%
Frequency	60 Hz ± 0.5%
	50 Hz ± 0.5%
	400 Hz ± 0.5%
Peak Load Current	52 A (115 Vrms)
	26 A (230 Vrms)
Load Power Factor	0-1.0 (leading or lagging)
Total Harmonic Distortion	2% (2000 W resistive load)
Dual DC1 Output (optional)	
Voltage Regulation (Over Load & Temperature)	± 3%
Common Voltage/Power combinations	12 V at 42 A =504 W
(Two separate DC outputs)	15 V at 34 A =510 W
(Other Options Available)	24 V at 21 A =504 W
	28 V at 18 A =504 W
	40 V at 12.5 A =500 W
	50 V at 10 A =500 W
DC2 Output (optional)	
Voltage Setpoint	± 3%
Droop Share (Output droops vs. load to allow passive sharing among modules.)	
24 V Option	
Voltage Regulation (Over Load & Temperature)	-15%
	26 V at 0 A
	22 V at 100 A =2200 W
28 V Option	
Voltage Regulation (Over Load & Temperature)	-13%
	30 V at 0 A
	26 V at 96.2 A =2500 W

Specifications subject to change without notice.

ENVIRONMENTAL CHARACTERISTICS MIL-STD-810G	
Temperature Methods 501.5, 502.5	
Operating Temperature	-20°C — +55°C
Storage Temperature	-20°C — +65°C
Temperature Methods 503.5	
Storage Temperature	-20°C — +65°C
Altitude Method 500.5	
Operating	0 - 18,000 ft
Non-operating	0 - 40,000 ft
Environmental Tests	
Shock/Drop	Method 516.6, Procedures 1,4,6
Temperature Shock	Method 503.5, Procedure 1
Vibration	Method 514.6, CAT 5 & 24
Fungus	Method 508.6
Salt Fog	Method 509.5
Sand and Dust	Method 510.5, Procedures 1,2
Rain	Method 506.5 Procedure 1
Humidity	Method 507.5 Procedure 2
Mechanical Vibrations of Shipboard Equipment	Method 528 Procedure 1

RELIABILITY CHARACTERISTICS MIL-HDBK-217F		
MTBF	50 kHrs	MIL-217F Ground Benign, Ta=25 °C

ELECTROMAGNETIC CAPABILITY MIL-STD-461F	
CE101	30 Hz - 10 kHz
CE102	10 kHz - 10 MHz
CS101	30 Hz - 150 kHz
CS106	10 kHz - 40 GHz
CS114	10 kHz - 200 MHz
CS116	10 kHz - 100 MHz
RE101	30 Hz - 100 kHz
RE102	10 kHz - 18 GHz
RS101	30 Hz - 100 kHz
RS103	2 MHz - 40 GHz

MECHANICAL CHARACTERISTICS	
Standard 2U Battery Pack	
Chassis Size	17.00"W x 22.22"D x 3.40"H
Case Material	Aluminum
Total Weight	65 lbs. (with chassis & battery)
Connectors	
AC Input Connector	CA02COME22-2PB
DC Input Connector	CA02COME24-10PB
AC Output Connector	CA02COME22-2SB
DC1 Output Connector	CA02COME22-22SB
DC2 Output Connector	CA02COME24-10SB
User I/O Ports	HD DB15 Female
Configuration I/O Port	HD DB15 Male
Ethernet Port	Amphenol RJF22N00, Code B
Cooling Exhaust Fans	
Sound Pressure Level (SPL)	54 dB(A)
Air Flow	0.67(m^3/min) 23.7 CFM

Four fans in system, above specs are for each fan separately.

High Density DB15 Female (15 Pin Connector)



Signal	PIN	Function
TX	2	RS232 DCE Device Transmit
RX	3	RS232 DCE Device Receive
GND	4, 5	Ground reference for all digital inputs and outputs
$\overline{\text{LOW_BATT}}$	6	Open collector output where "low" indicates battery charge level <10%
$\overline{\text{ACIN_GOOD}}$	7	Open collector output where "low" indicates AC Input voltage is within range
+5V	8	Vout with minimal current drive usable as a pull-up voltage for open collector output signals. Load must be <35 mA
$\overline{\text{ON_BATT}}$	9	Open collector output where "low" indicates that the UPS is running on battery power.
REMOTE_START	12	Drive this line "high" with ≥5 mA to enable UPS outputs
SHUTDOWN	13	Drive this line "high" with ≥5 mA to disable UPS outputs
$\overline{\text{OUT_OK}}$	14	Open collector output where "low" indicates AC Output voltage is within range
$\overline{\text{OVER_TEMP}}$	15	Open collector output where "low" indicates that the UPS is at or above its maximum temperature

Safety & Qualifications	
IEC 62133	Safety requirements for portable secondary sealed cells.
ST/SG/AC.10/11/Rev.5	UN Recommendations on the Transport of Dangerous Goods
UL 1642	Lithium Batteries
IEC 62040-1	General and safety requirements for UPS (Does not apply to 400 Hz operation)
IEC 62040-2	UPS Electromagnetic compatibility (Category C4)

LITHIUM-POLYMER BATTERY CHARACTERISTICS		
Run Time on Battery		
2500 W : 10 min	**2000 W : 13 min**	**1250 W : 21 min**
Recharge Time (to 90% charge)		
Standard		
Total Output Power	**< 2000 W**	**2 hrs**
Temperature Range for Recharge: 0°C to 45°C		
Internal heaters maintain battery temperature above 0°C when input power is present.		
Battery charging only enabled below +45°C.		
UPS-3000 uses 2 1U Battery Packs		

Mechanical Features

UPS-3000-S-2U

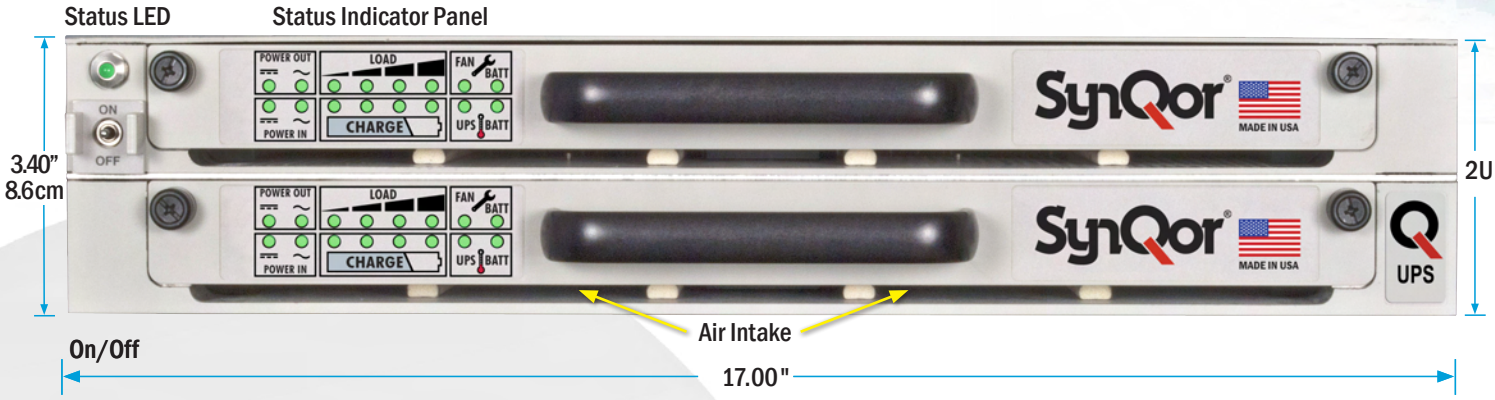

UPS-3000-S-2U with DC Input / DC1 Output Options

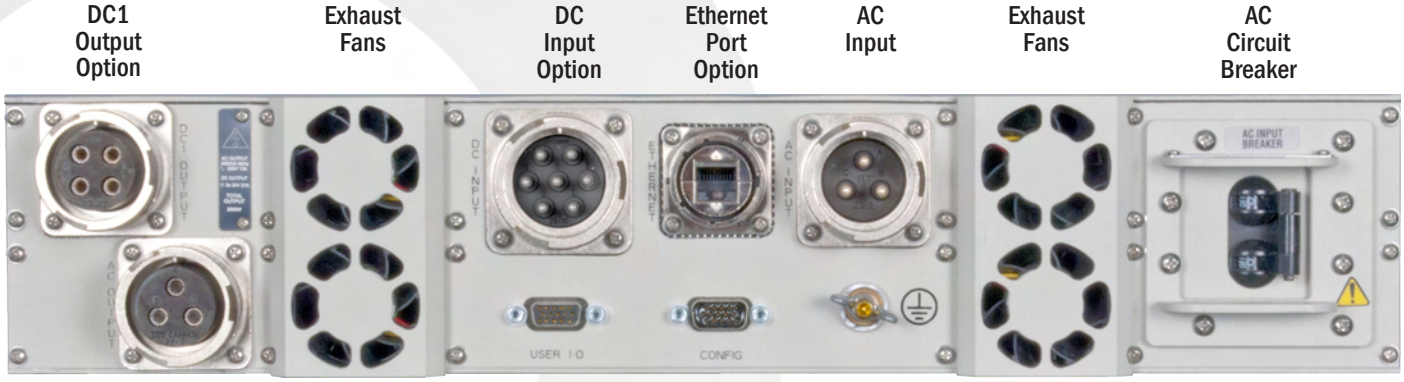

UPS-3000-S-2U with DC1 Output / DC2 Output Options

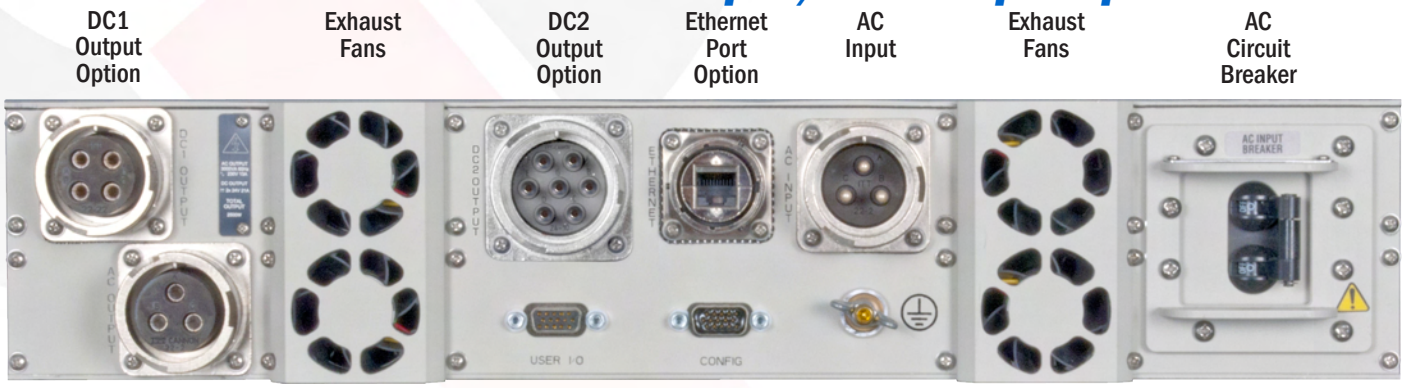

Block Diagram

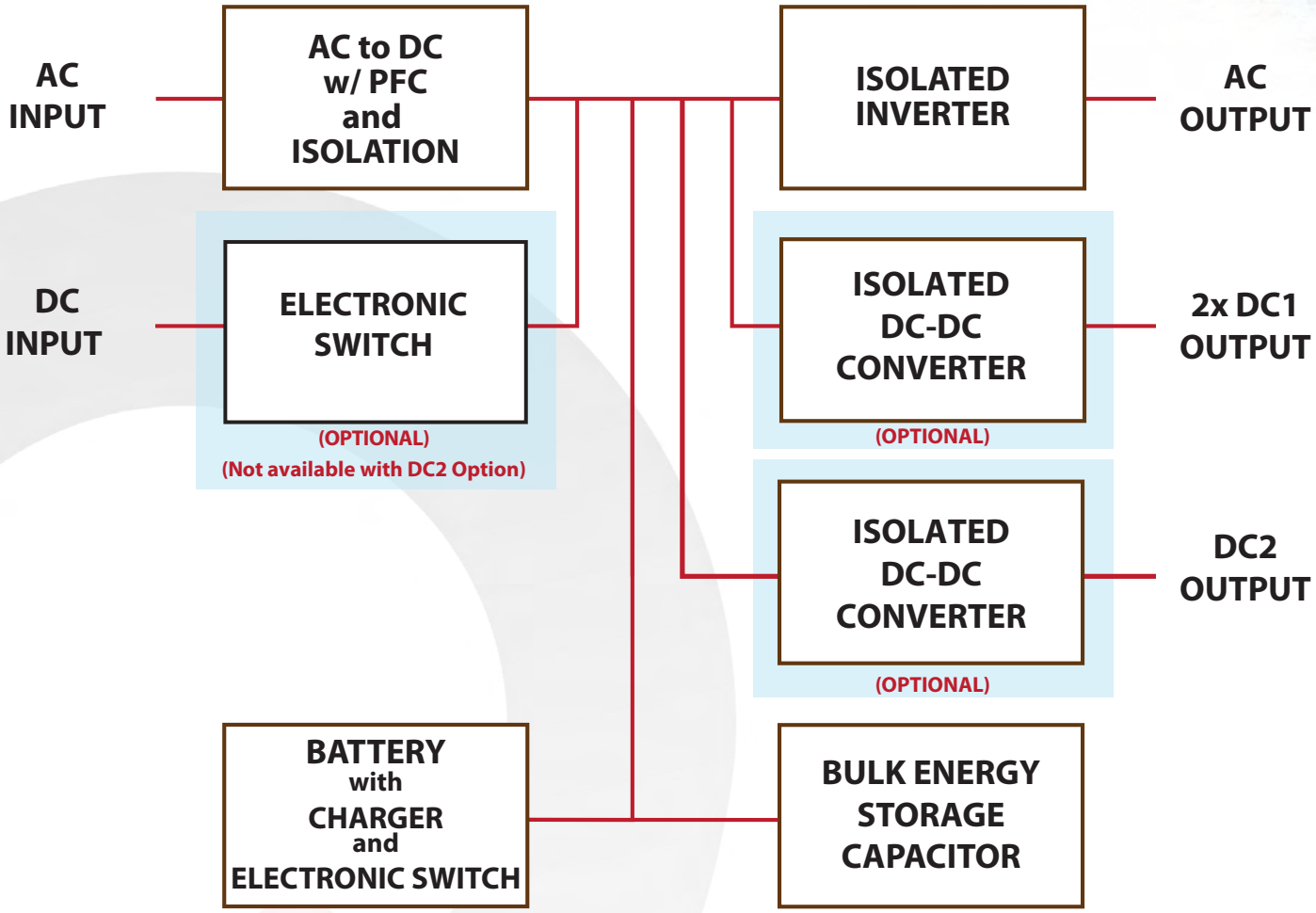

Mechanical Diagrams

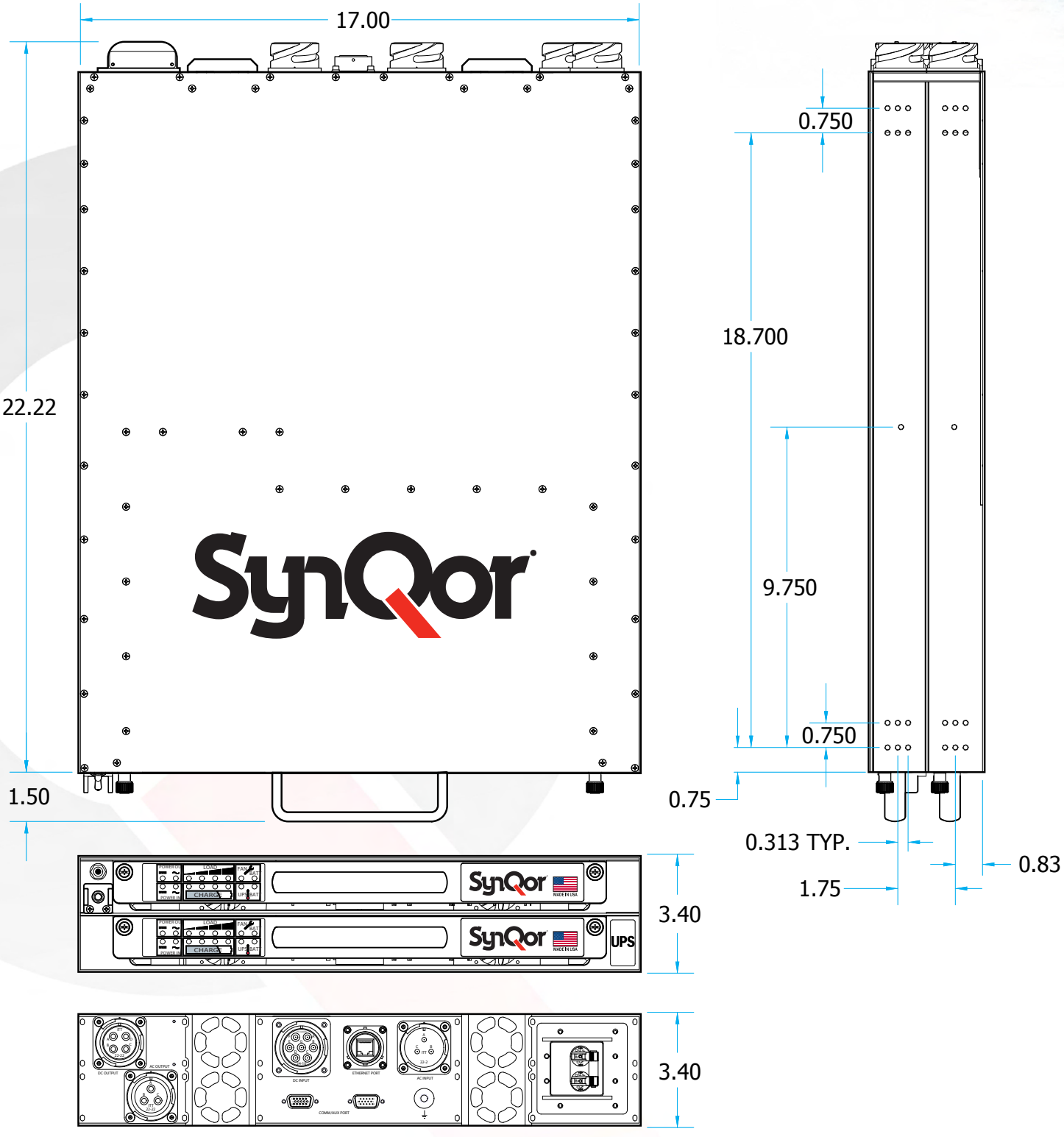

Accessory Options

Replacement Battery Packs	3000S Series
1U; 10 lbs. (200 Watt Hours) - Two required per UPS	BAT-0200-S-1U-000
Rail Kits	
Slide Rail Kit[2] - Two required per UPS	SYN-9002
Fixed Bracket Kit[3]	SYN-9033
Power Cables (10' long)	
AC Input (Hardwire)	SYN-9105
AC Output (115 Vrms/230 Vrms) (Hardwire)	SYN-9135
DC Input (Hardwire)	SYN-9155
DC1 Output (Hardwire)	SYN-9173
DC2 Output (Hardwire)	SYN-9178
AC Output Power Strip (Circular Connector)	
6 NEMA Receptacles with Breaker (Rackmount & 3' Cable)	SYN-9236
Rackmount Transit Cases	
Transit Case, 3U, Gray, with Casters[3]	SYN-9410
Transit Case, 3U, Gray, No Casters[3]	SYN-9412

Notes:

1: Other Options also available, check the website or contact power@synqor.com for further information.

2: Slide Rail Kit (SYN-9002) is not recommended for transit and ruggedized use.

3: Fixed Bracket Kit (SYN-9033) with Transit Case (SYN-9410 or SYN-9412) is required for transit and ruggedized use (qualified to pass MIL-STD-810G Loose Cargo andTransit Drop requirements).



Optional Rackmount Transit Case

User Communications (I/O) Cables	
HD DB15M to DB9F (RS232, 10')	SYN-9301
HD DB15M to DB15M (RS232 and Digital I/O, 10')	SYN-9305
Mil-Circular to RJ45 (Ethernet, 10')	SYN-9321
Configuration Cables	
HD DB15F to DB15F (2 Units Parallel, 3')	SYN-9311
HD DB15F to DB15F (3 Units Parallel, 6')	SYN-9315
HD DB15F to DB15F (2 Units Series, 3')	SYN-9313
HD DB15F to DB15F (3 Units 3-Phase, 6')	SYN-9317



6 NEMA Receptacles with Breaker



Ordering Information

PART NUMBERING SYSTEM

Model Number	Power	Battery Run-Time @ Full Power (80% Power)	Height	Weight	Options					
					DC Input (28 V nom)	DC Output	Floating Neutral AC Output	AC Input Frequency (50/60 Hz or 400 Hz)	AC Output Voltage (115 Vrms or 230 Vrms)	AC Output Frequency (50 Hz, 60 Hz or 400 Hz)
UPS-3000-S-2U	**2500 W 3000 VA**	**>10 min.** (>13 min.)	**2U**	**65 lbs.**	•	2x 500 W DC1 1x 2500 W DC2	•	•	•	•

Family	Output Power	Battery Pack Size	Height	AC Input Frequency	AC Output Voltage	AC Output Neutral Wire	AC Output Set Point Frequency	DC Input / DC2 Output	Dual DC1 Output Voltage	Additional Options
UPS	**3000**	**S**	**2U**	**L**	**1**	**G**	**6**	**D**	**28**	**000**
UPS	**3000:** 3000 VA 2500 W	**S:** Standard	**2U:** 3.40"	**L:** 47-65 Hz **W:** 47-800 Hz	**1:** 115 Vrms **2:** 230 Vrms	**G:** Grounded **F:** Floating *	**5:** 50 Hz **6:** 60 Hz **4:** 400 Hz	**S:** Not Installed **D:** DC Input **M:** DC2 Out 24 VDC with Droop Share **R:** DC2 Out 28 VDC with Droop Share	**00:** None **12:** 12 V **15:** 15 V **24:** 24 V **28:** 28 V **40:** 40 V **50:** 50 V	**000:** None **0CE:** CE Marking **E00:** Ethernet / SNMP **ECE:** Ethernet / SNMP & CE Marking

Not all combinations make valid part numbers, please contact SynQor for availability. See the Product Summary web page for more options.

* Note: Order "F: Floating" option when configuring the AC output for multi-unit combinations.

Example: **UPS-3000-S-2U-L1G6D28-000**

Contact SynQor for further information and to order:

Phone: 978-849-0600
Toll Free: 888-567-9596
Fax: 978-849-0602
E-mail: mqnbofae@synqor.com
Web: www.synqor.com
Address: 155 Swanson Road
Boxborough, MA 01719 USA

PATENTS

SynQor holds numerous U.S. patents, one or more of which apply to most of its power conversion products. Any that apply to the product(s) listed in this document are identified by markings on the product(s) or on internal components of the product(s) in accordance with U.S. patent laws.

SynQor's patents include the following:

5,999,417 6,222,742 6,545,890 6,594,159 6,894,468 6,896,526
6,927,987 7,050,309 7,072,190 7,085,146 7,119,524 7,269,034
7,272,021 7,272,023 7,558,083 7,564,702 7,765,687 7,787,261
8,023,290 8,149,597 8,493,751 8,644,027 9,143,042

WARRANTY

SynQor offers a 1 year limited warranty. Complete warranty information is listed on our website or is available upon request from SynQor.