MINV
MINV-4000-1U-180

Military-Grade Inverter

4000 W / 5000 VA Output Power	180 V Nominal DC Input Voltage	135 V - 234 V DC Input Voltage	230 Vrms 50 Hz, 60 Hz, or 400 Hz AC Output Voltage Options	89% Full Load Efficiency

Sealed Construction, Ultra low Weight, Compact Size



Designed & Manufactured in USA

SynQor's Military Inverter units are designed for the extreme environmental and demanding electrical conditions of Military/Aerospace applications. SynQor's MINV incorporates field proven high efficiency designs and rugged packaging technologies. This MINV will accept a wide range of steady-state and transient DC input voltage values while delivering a well-conditioned AC output to the load. It is designed and manufactured in SynQor's USA facilities to comply with a wide range of military standards. Options include a selection of output frequencies and configurations that provide a single output, three single-phase outputs, or a 3-Phase output.

Combine Up to 3 units for Higher Power, Voltage and/or 3-Phase AC output

Features

- Sealed, weather-proof, shock-proof construction
- 4000 W (5000 VA) output power
- Full power operation: -40 °C to +55 °C
- 180 V nominal DC input
- 135 V - 234 V input range
- Pure sinusoidal AC output voltage (230 Vrms, 60 Hz)
- Handles 0.0—1.0 power factor loads and non-linear loads
- Up to 3 units can be combined for higher power, voltage or a 3-Phase AC output
- User I/O and Configuration signal ports
- 1U high rack mount unit (17.00 ”W x 22.43 ”D x 1.73 ”H)
- Low weight: 30 lbs.

Specification Compliance

MINV-4000 units are designed to meet (pending):

- MIL-STD-810G - Environmental Engineering Considerations
- MIL-STD-461F - Electromagnetic Interference

In-Line Manufacturing Process

- AS9100 and ISO 9001 certified facility
- Full component traceability

Options

- 50 Hz, 60 Hz, or 400 Hz AC output
- Multiple single-phase outputs and 3-Phase output units
- Shipboard version with floating neutral wire

Contents

Technical Specification 2
Mechanical Diagrams 4
Accessory Options 6
Ordering Information 7

Technical Specification

DC INPUT CHARACTERISTICS	
Steady State Operating Voltage	135 - 234 V
Continuous Maximum Input Current	35 A (full load, 135 V)
Transient Maximum Input Current	50 A
AC OUTPUT CHARACTERISTICS	
Total Output Power Continuous	4000 W (5000 VA)
AC Output Waveform	Pure Sinusoidal
Voltage Line-Neutral	230 Vrms ± 3%
Frequency	60 Hz ± 0.5% 50 Hz ± 0.5% 400 Hz ± 0.5%
Load Power Factor	0-1.0 (leading or lagging)
Total Harmonic Distortion	2% (3000 W resistive load)
Single-Phase Output	
Steady State Load Current	21.7 Arms (230 Vrms)
Peak Load Current	39 Apk (230 Vrms)
Multi-Phase Output	
Steady State Load Current per Phase	7.3 Arms (230 Vrms L-N)
Peak Load Current per Phase	13 Apk (230 Vrms L-N)

Specifications subject to change without notice.

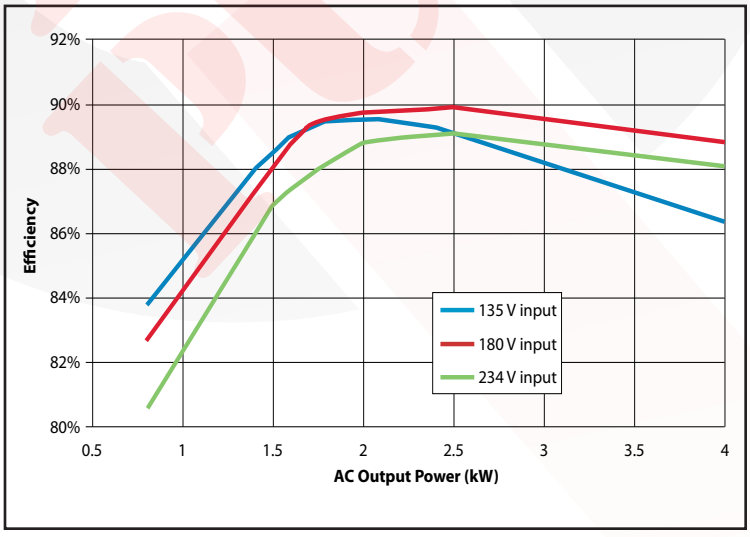

Figure A: Efficiency

ENVIRONMENTAL CHARACTERISTICS MIL-STD-810G	
Temperature Methods 501.5, 502.5	
Operating Temperature	-40 °C — +55 °C
Non-operating Temperature	-40 °C — +70 °C
Altitude Method 500.5	
Operating	0 - 18,000 ft
Non-operating Temperature	0 - 40,000 ft
Environmental Tests	
Shock/Drop	Method 516.6, Procedures 1,4,6
Temperature Shock	Method 503.5, Procedure 1
Vibration	Method 514.6, CAT 5, 7, 8, 9, 24
Fungus	Method 508.6
Salt Fog	Method 509.5
Sand and Dust	Method 510.5, Procedures 1,2
Rain	Method 506.5 Procedure 1
Humidity	Method 507.5 Procedure 2
Mechanical Vibrations of Shipboard Equipment	Method 528 Procedure 1

RELIABILITY CHARACTERISTICS MIL-HDBK-217F		
MTBF	TBD kHrs	MIL-217F Ground Benign, Ta=25 °C

ELECTROMAGNETIC CAPABILITY MIL-STD-461F	
CE101	30 Hz - 10 kHz
CE102	10 kHz - 10 MHz
CS101	30 Hz - 150 kHz
CS106	10 kHz - 40 GHz
CS114	10 kHz - 200 MHz
CS116	10 kHz - 100 MHz
RE101	30 Hz - 100 kHz
RE102	10 kHz - 18 GHz
RS101	30 Hz - 100 kHz
RS103	2 MHz - 40 GHz

MECHANICAL CHARACTERISTICS	
1U Standard Chassis	
Chassis Size (W x D x H)	17.00 "W x 22.43 "D x 1.73 "(1U)H
Case Material	Aluminum
Total Weight	30 lbs.
DC Input Connectors	
DC Input Connector	CB2-20-19PXS
AC Output Connectors	
230 V/240 V Single Phase	CB2-20-19SXS
230 V/240 V Multi Single Phase	CB2-20-15SXS
230 V/240 V L-N 3-Phase	CB2-20-15SXS
I/O Ports	
User I/O Ports	HD DB15 Female
Ethernet Port	Amphenol RJF22N00, Code B
Cooling Exhaust Fans	
Sound Pressure Level (SPL)	64 dB(A)
Air Flow	0.92 (m^3/min) 32.5 CFM

Two fans in system, above specs are for each fan separately.

Technical Specification

MINV-4000-1U-180 Front Panel



MINV-4000-1U-180 Rear Panel





High Density DB15 Female (15 Pin Connector)

Signal	PIN	Function
TX	2	RS232 DCE Device Transmit
RX	3	RS232 DCE Device Receive
GND	4, 5	Ground reference for all digital inputs and outputs
BATTLE_MODE	6	TTL-Input*, pull "low" to engage Battle Mode to disable internal over temperature protection, has internal pull-up to +5 V.
DCIN_GOOD	7	Open collector* output where "low" indicates DC Input voltage is within range
+5 V	8	Vout with minimal current drive usable as a pull-up voltage for open collector output signals. Load must be < 35 mA
BLACKOUT_MODE	9	TTL-Input*, pull "low" to engage Blackout Mode to disable front-panel LEDs and audible alarms, has internal pull-up to +5 V.
REMOTE_START	12	Drive this line "high" with ≥ 5 mA to enable MINV outputs
SHUTDOWN	13	Drive this line "high" with ≥ 5 mA to disable MINV outputs
OUT_OK	14	Open collector* output where "low" indicates AC Output voltage is within range
OVER_TEMP	15	Open collector* output where "low" indicates that the MINV is at or above its maximum temperature

*With an internal 50 k Pull-up Resistor to 5 V and ESD Protection Diodes.

Safety & Qualifications (Pending)
CAN/CSA C22.2 No.60950-1
UL 60950-1
EN 60950-1

Mechanical Diagrams

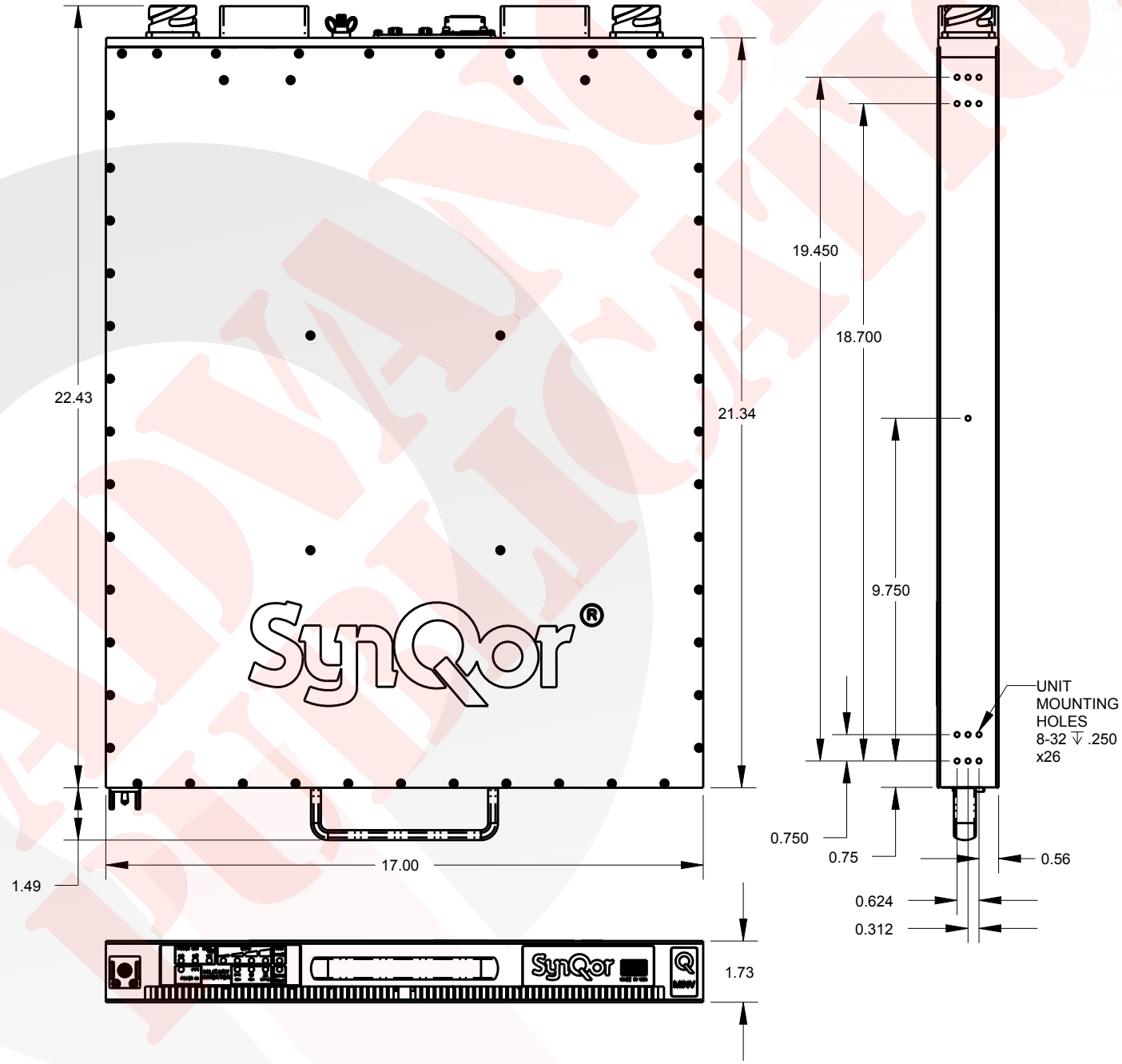

Block Diagram

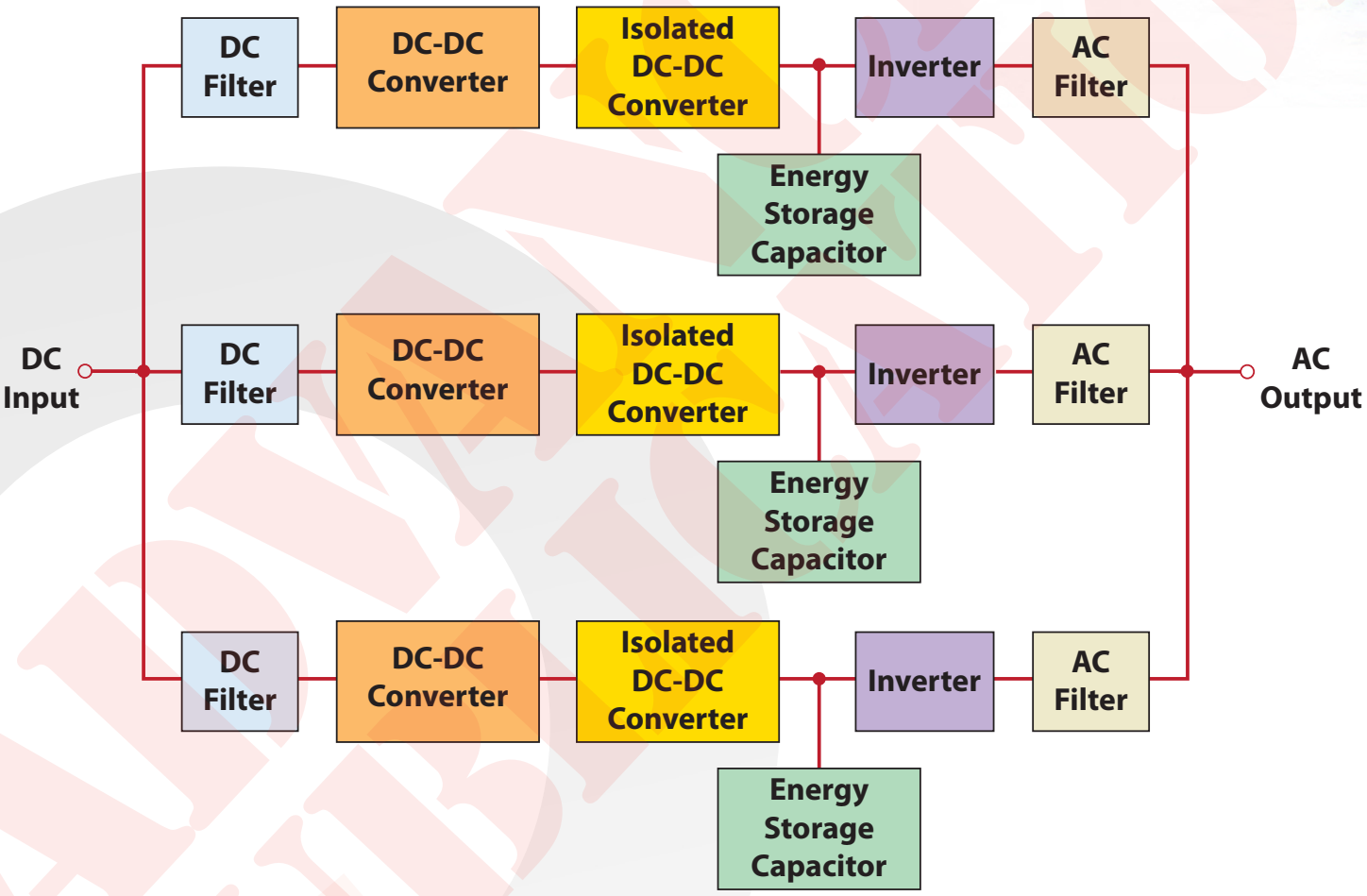

The unit can also be configured to provide 1 or 3 isolated single-phase outputs
or
one 3-phase output.

Accessory Options

Rail Kits	
Slide Rail Kit[2]	SYN-9002
Fixed Bracket Kit[3]	SYN-9031
Power Cables (10′ long)	
AC Output (Hardwire)	SYN-9630
DC Input (Hardwire)	SYN-9655
Rackmount Transit Cases	
Transit Case, 3U, Gray, with Casters[3]	SYN-9410
Transit Case, 3U, Gray, No Casters[3]	SYN-9412

Notes:
1: Other Options also available, check the website or contact power@synqor.com for further information.
2: Slide Rail Kit (SYN-9002) is not recommended for transit and ruggedized use.
3: Fixed Bracket Kit (SYN-9031) with Transit Case (SYN-9410 or SYN-9412) is required for transit and ruggedized use (qualified to pass MIL-STD-810G Loose Cargo and Transit Drop requirements).

User Communications (I/O) Cables	
HD DB15M to DB9F (RS232, 10′)	SYN-9301
HD DB15M to DB15M (RS232 and Digital I/O, 10′)	SYN-9305
Mil-Circular to RJ45 (Ethernet, 10′)	SYN-9321
Configuration Cables[1]	
HD DB15F to DB15F (2 Units Parallel, 3′)	SYN-9611
HD DB15F to DB15F (3 Units Parallel, 6′)	SYN-9615
HD DB15F to DB15F (2 Units Series, 3′)	SYN-9613
HD DB15F to DB15F (3 Units 3 Phase, 6′)	SYN-9617

Notes:



Optional
Rackmount Transit Case



6 NEMA Receptacles with Breaker

Ordering Information

Family	Output Power	Height	DC Input Voltage	AC Output Voltage	AC Output Neutral Wire	AC Output Set Point Frequency	Output Configuration	Additional Options
MINV	4000	1U	180	2	F	5	S	E00
MINV	**4000:** 4000 W 5000 VA	**1U:**1.73"	**180:** 135 - 234 V	**2:** 230 Vrms	**G:** Grounded **F:** Floating	**5:** 50 Hz **6:** 60 Hz **4:** 400 Hz	**S:**One Single-Phase Output **T:**Three Single-Phase Outputs **Y:**One 3-Phase Output	**000:** None **E00:** Ethernet / SNMP

Not all combinations make valid part numbers, please contact SynQor for availability. See the Product Summary web page for more options.

Example: MINV-4000-1U-180-2F5S-E00

Contact SynQor for further information and to order:

Phone: 978-849-0600
Toll Free: 888-567-9596
Fax: 978-849-0602
E-mail: power@synqor.com
Web: www.synqor.com
Address: 155 Swanson Road
Boxborough, MA 01719
USA

PATENTS

SynQor holds numerous U.S. patents, one or more of which apply to most of its power conversion products. Any that apply to the product(s) listed in this document are identified by markings on the product(s) or on internal components of the product(s) in accordance with U.S. patent laws. SynQor's patents include the following:

5,999,417	6,222,742	6,545,890	6,594,159	6,894,468	6,896,526
6,927,987	7,050,309	7,072,190	7,085,146	7,119,524	7,269,034
7,272,021	7,272,023	7,558,083	7,564,702	7,765,687	7,787,261
8,023,290	8,149,597	8,493,751	8,644,027	9,143,042	

WARRANTY

SynQor offers a one (1) year limited warranty. Complete warranty information is listed on our website or is available upon request from SynQor.